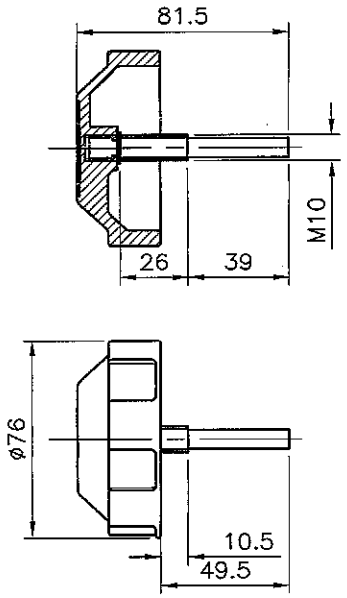


89800014 – POLYCARBONATE SPINNER
(FOR COMMODORE & FOLDING WHEELS – SUPPLIED ONLY ON REQUEST)

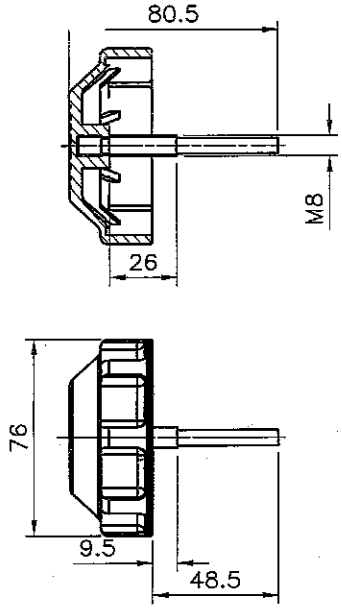


89800053 – PLASTIC SPINNER WITH M8 THREAD
(FOR COMMODORE, FOLDING WHEELS – BAVARIA ONLY)

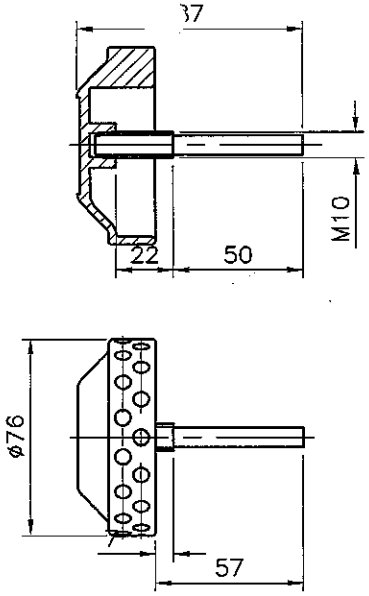


89100143 – STANDARD PREMIERE SPINNER
(FOR COMMODORE & FOLDING WHEELS)

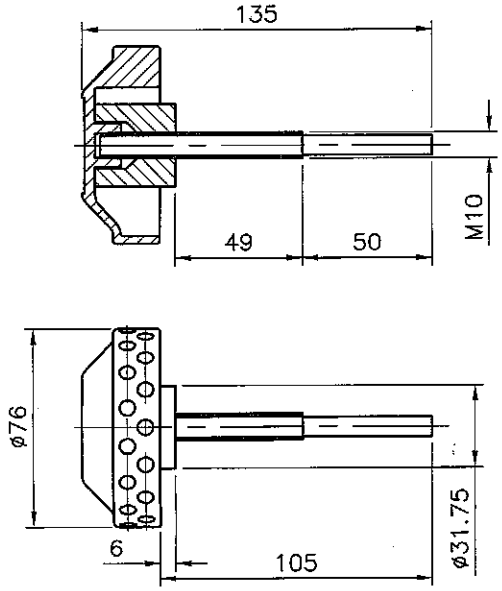


89100144 – MINI MAXI PREMIERE SPINNER
(FOR MINI MAXI, Y–SPOKE & TRI–SPOKE WHEELS)

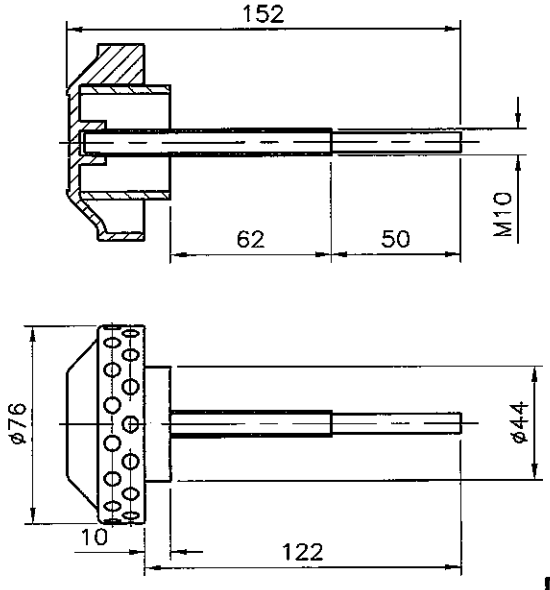


89100145 – GRAND MAXI PREMIERE SPINNER
(FOR GRAND MAXI WHEELS)

COPYRIGHT:–

THE DRAWING AND ALL THE INFORMATION PROVIDED ARE PROPERTY OF LEWMAR LTD AND CANNOT BE REPRODUCED, TRANSFERED OR MODIFIED WITHOUT PERMISSION. COPYRIGHT LEWMAR LTD.

GENERAL NOTES:–

1. ALL DIMENSIONS ARE IN MM UNLESS STATED OTHERWISE

2. ALL DIMENSIONS ARE FOR REFERENCE ONLY

PRODUCTION NOTES:–

| DATE CHANGED | ISS | CHANGE DESC. | BY |
|---|---|---|---|
| 17/04/02 | A | FIRST ISSUE | DU |
| 02/05/07 | B | ILLUSTRATION UPDATE | YL |

MATERIAL:–

N/A

ORTHOGRAPHIC PROJECTION:

| | |
|---|---|
| SCALE:– | 1:2 @ A3 |
| DRAWN:– | YAT |
| DATE:– | 02/05/2007 |
| SHEET:– | 1 OF 1 |
| CHECK'D:– | |

TITLE:–

STANDARD BRAKE SPINNERS DATASHEET

LEWMAR
LEWMAR STEERING DIVISION
UNIT 1, BLOCK B, FORESHORE, LUTON, BEDFORDSHIRE, UK. LU4 9EP
TEL: +44(0) 1582 404400 FAX: +44(0) 1582 400331
EMAIL: DESIGN@LEWMARSTEERING.COM

DWG NO: BRAKE SPINNERS

ISSUE: B